慈溪市万捷电子有限公司
CIXI WANJIE ELECTRONIC CO., LTD

SHUI YUNPU ®

产品规格书
product specification

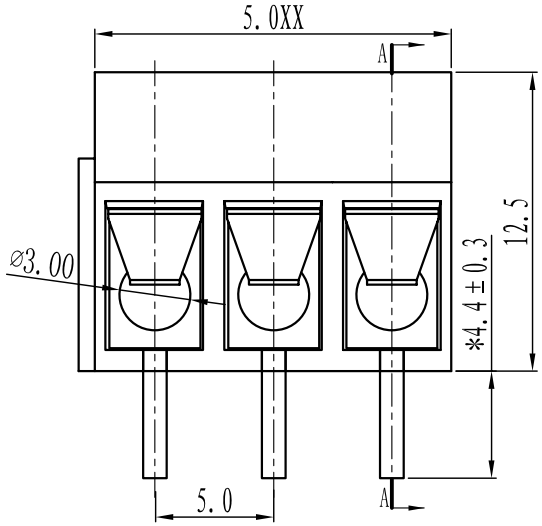

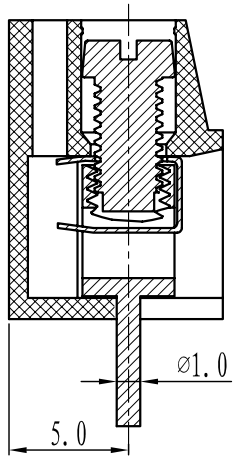

SECTION A-A

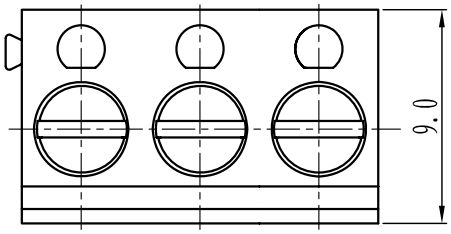

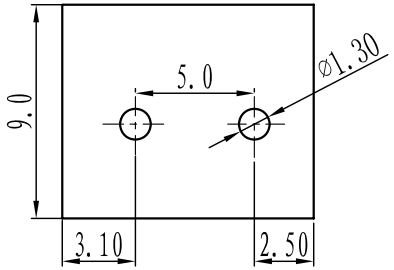

电 气 性 能/Electrical

参考标准/Standard:	UL	IEC
额定电压/Rated voltage:	250V	250V
额定电流/Rated current:	16A	24A

接触电阻/Contact resinstance: 20mΩ

使用线径/Wire range: 22-14AWG 2.5mm²

耐电压/Withstanding voltage: AC2000V/1Min

绝缘电阻/Insulation resistance: 500MΩ/DC500V

机 械 性 能/Mechanical

温度范围/Temp.Range: -30° C~+120° C

扭 矩/Torque: 0.5Nm(4.51b`in)

剥线长度/Strip length: 4.5-5mm

尺 寸/Dimensions

间 距/Pitch: 5.00mm

极 数/Poles: 2P-24P

材 质 及 电 镀/Material

塑 件/Housing: PA66,UL94V-0

螺 丝/Screws: M3.0,steel Zinc plated

方 针/Pin header: Brass,Ni plated

弹 片/Shrapnel: Phosphor bronze,Ni plated

订 购 方 式：
HOW TO ORDER

□□ - □ □ P - □□□ - X X X 客户需求 Custmor Request

型号/Model

极数/POLE

0.未定义/No definition
1.单间距/Sing pitch
2.双倍间/Double pitch

灰色/Grey	10	绿色/Green	40	透明/Transparent	70
蓝色/Blue	20	橙色/Orange	50	黄色/Yellow	80
黑色/Black	30	红色/Red	60	白色/Whlte	90

TOLERANCES EXCEPT AS NOTED

	linear dimension					fillet	chamfer		∠ short angle sid				≡	—	▱	//	⊥
variable range	to 6	over 6 to 30	over 30 to 120	over 120 to 480	over 480 to	all	to 6	over 6 to	to 10	over 10 to 50	over 50 to 120	over 120 to	all	to 5	over 5 to 30	over 30 to 120	over 120 to
tolerance	±0.1	±0.2	±0.3	±0.5	±0.9	±0.2	±0.5	±1	1°	30'	20'	10'	0.5	0.025	0.06	0.12	0.4

单位/UNITS	mm	尺寸/SIZE	A4	比例/SCALE	比例	第一视角/FIRST ANGLE PROJECTION
慈溪市万捷电子有限公司 CIXI WANJIE ELECTRONIC CO., LTD						名称/NAME: WJ300-XXP-1YY-00A